NICHIA CORPORATION

SPECIFICATIONS FOR WHITE LED

572 series

PART NO. NJSW572BT-Y6

Applications

- Pb-free Reflow Soldering Application
- ESD Withstand Voltage (HBM) Class 3B
- RoHS Compliant
- IATF 16949 Compliant
- AEC-Q102 Qualified

NICHIA

FEATURES

572 Series

Nichia's 572 Series LEDs are high-performance, 3030 package LEDs that provide versatile solutions for automotive applications. Using Nichia's in-house chips and phosphors housed in an iconic black, high-reliability polymer package, these series LEDs ensure superior quality and dependable mass production supply.

	Std. Color (White / Amber)		Premium White	
0.25 W	White NSSW572C Available	Amber NSSA572C Available	Ra≥80, R9>0 NSSW572C-PJ Available	Ra≥93, R9>80 NJSW572C-PR Available
0.5 W	White NJSW572B Available	Amber NJSA572B Available		
1.0 W	White NJSW572B-Y6 Available in Apr. 2026	Amber NJSA572B-Y6 Available in Apr. 2026		

White

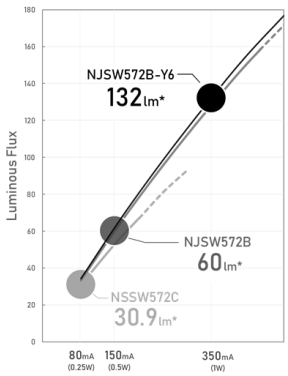

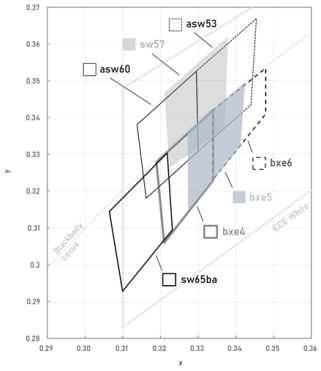

Color Ranks \ Flux Ranks	NSSW572C			NJSW572B		NJSW572B-Y6		
	25	30	35	50	60	70	115	130	145
asw60, sw57, asw53, sw65ba, bxe4, bxe5, bxe6		T25	T30		B50	B60		C115	C130

Amber

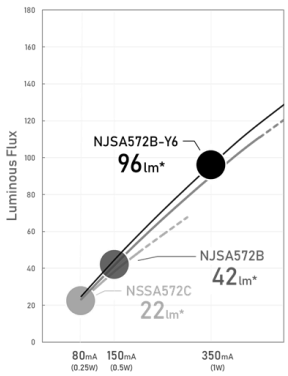

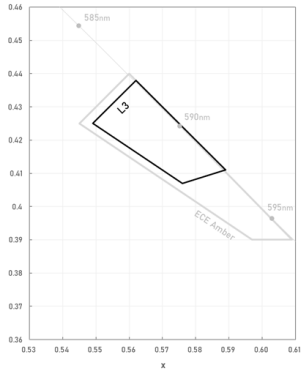

Color Rank \ Flux Ranks	NSSA572C				NJSA572B		NJSA572B-Y6		
	18	20	25	27	30	40	50	80	95	110
L3		H18	T20	H25		B30	B40		C80	C95

*Note: lumen values noted with an asterisk are based on the applicable binning current for the listed LED part number and measured at T_J = 25°C.

Premium White

NSSW572C-PJ
Ra≥80, R9>0

NEW
NJSW572C-PR
Ra≥93, R9>80

Efficient ⟷ Comfortable / Luxury

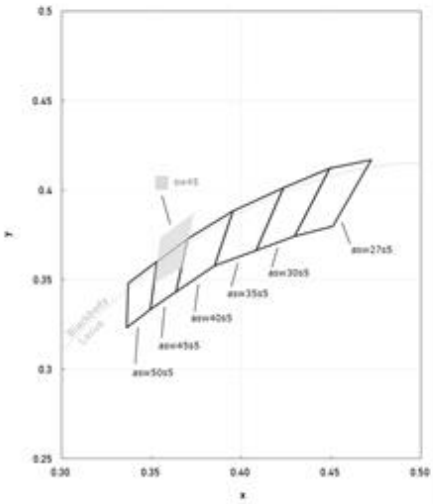

sw45: NSSW572C-PJ
Other Ranks: NJSW572C-PR

CONTENTS

SPECIFICATIONS 2
(1) Absolute Maximum Ratings 2
(2) Initial Electrical/Optical Characteristics 2
(3) Thermal Resistance 2
(4) Ranks 2
CHARACTERISTIC CURVES 4
(1) Optical Characteristics 4
(2) Forward Current Characteristics / Temperature Characteristics 5
DERATING CHARACTERISTICS 7
OUTLINE DIMENSIONS 8
SOLDERING 9
TAPE AND REEL DIMENSIONS 11
PACKAGING - TAPE & REEL 12
LOT NUMBERING CODE 13
CAUTIONS 14

SPECIFICATIONS

(1) Absolute Maximum Ratings

Item	Symbol	Absolute Maximum Rating	Unit
Forward Current	I_F	450	mA
Pulse Forward Current	I_{FP}	900	mA
ESD Withstand Voltage (HBM)	V_{ESD}	8	kV
Allowable Reverse Current	I_R	85	mA
Power Dissipation	P_D	1.62	W
Operating Temperature	T_{opr}	-40~125	°C
Storage Temperature	T_{stg}	-40~125	°C
Junction Temperature	T_J	150	°C

* Absolute Maximum Ratings at T_J=25°C.
* HBM ESD Component Classification Level of the LEDs: Class 3B
  For more details, see ANSI/ESDA/JEDEC JS-001.
* The operating Temperature range is the range of soldering temperature (T_S).

(2) Initial Electrical/Optical Characteristics

Item		Symbol	Condition	Typ	Unit
Forward Voltage		V_F	I_F=350mA	3.35	V
Luminous Flux		Φ_v	I_F=350mA	132	lm
Chromaticity Coordinate	x	-	I_F=350mA	0.331	-
	y		I_F=350mA	0.338	

* Characteristics at T_J=25°C, measured in a continuous square wave pulse mode with a pulse width of 0.05msec and a duty cycle of 1%.
* Luminous Flux value as per CIE 127:2007 standard.
* Chromaticity Coordinates as per CIE 1931 Chromaticity Chart.

(3) Thermal Resistance

Item	Symbol	Typ	Max	Unit
Thermal Resistance	$R_{\theta JS_real}$	8.8	11.0	°C/W
	$R_{\theta JS_el}$	5.7	7.2	

* Thermal resistance values ($R_{\theta JS_real}$) determined by considering the energy conversion efficiency(η_e=35%). Refer to JESD51.
* The maximum values are obtained using the statistical dispersion (i.e. +5σ, σ stands for standard deviation).

(4) Ranks

Item	Rank	Min	Max	Unit
Forward Voltage	-	3.1	3.6	V
Luminous Flux	C130	130	145	lm
	C115	115	130	

* Ranks at T_J=25°C measured in a continuous square wave pulse mode with a pulse width of 0.05msec and a duty cycle of 1%.
* Forward Voltage Tolerance: ±0.05V
* Luminous Flux Tolerance: ±5%
* LEDs from the above ranks will be shipped. The rank combination ratio per shipment will be decided by Nichia.

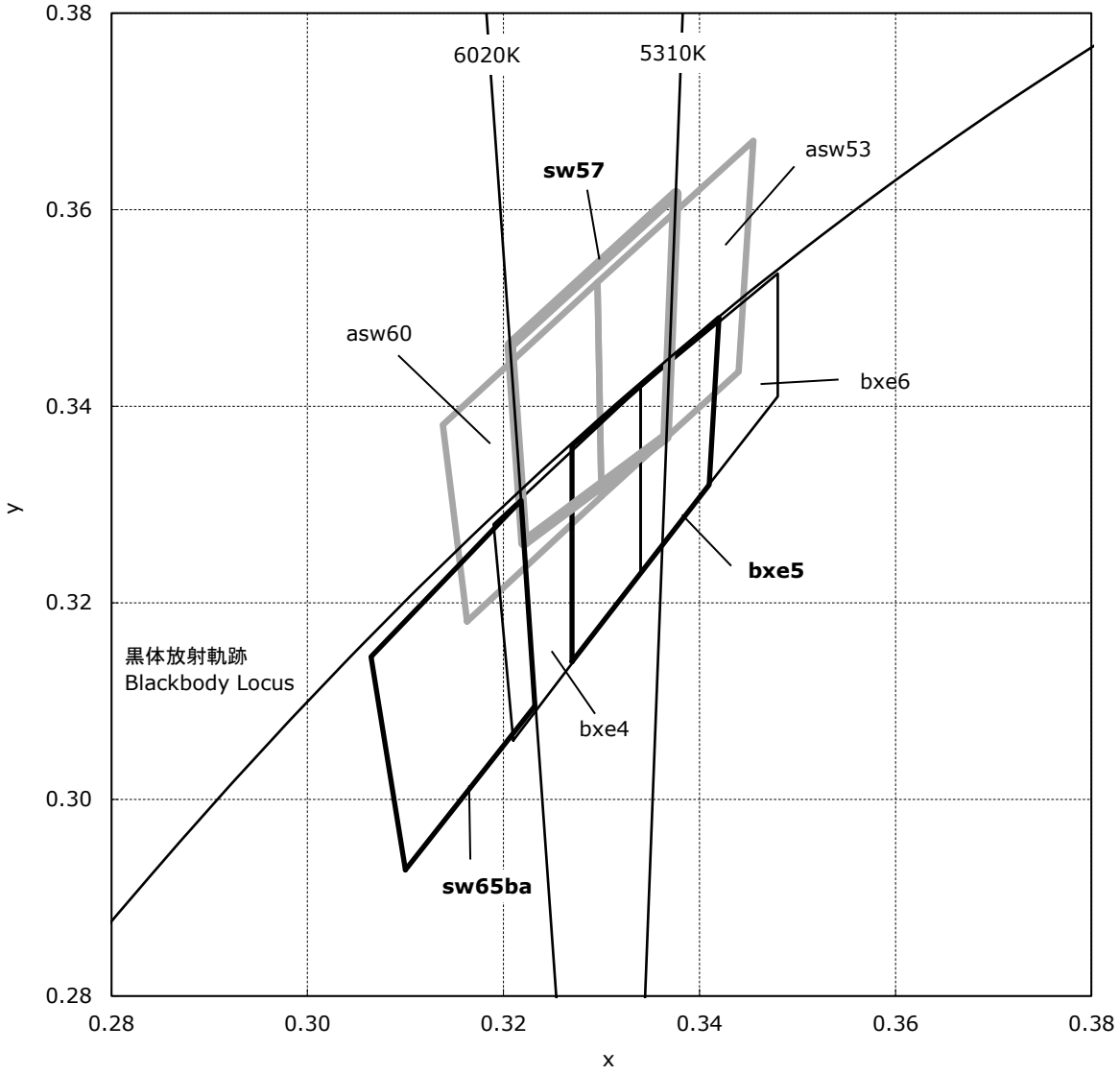

Color Ranks

	Rank asw53			
x	0.3300	0.3296	0.3455	0.3440
y	0.3308	0.3526	0.3670	0.3435

	Rank asw60			
x	0.3163	0.3138	0.3296	0.3300
y	0.3181	0.3381	0.3526	0.3308

	Rank bxe4			
x	0.3210	0.3190	0.3340	0.3340
y	0.3060	0.3280	0.3420	0.3230

	Rank bxe5			
x	0.3270	0.3270	0.3420	0.3410
y	0.3140	0.3360	0.3490	0.3320

	Rank bxe6			
x	0.3340	0.3340	0.3480	0.3480
y	0.3231	0.3420	0.3535	0.3410

	Rank sw57			
x	0.3221	0.3207	0.3376	0.3366
y	0.3261	0.3462	0.3616	0.3369

	Rank sw65ba			
x	0.3100	0.3065	0.3218	0.3232
y	0.2928	0.3145	0.3304	0.3095

* Ranks at T_J=25°C measured in a continuous square wave pulse mode with a pulse width of 0.05msec and a duty cycle of 1%.
* Chromaticity Coordinate Tolerance: ±0.003
* LEDs from the above ranks will be shipped. The rank combination ratio per shipment will be decided by Nichia.

CHARACTERISTIC CURVES

(1) Optical Characteristics

Part No. NJSW572B-Y6
No. STS-DA7-22660

* All characteristics shown are for reference only and are not guaranteed.
本特性は参考です。
* Characteristics measured in a continuous square wave pulse mode with a pulse width of 0.05msec and a duty cycle of 1%.
パルス幅0.05msec、デューティー比1%の連続矩形波により測定しています。

Spectrum
発光スペクトル

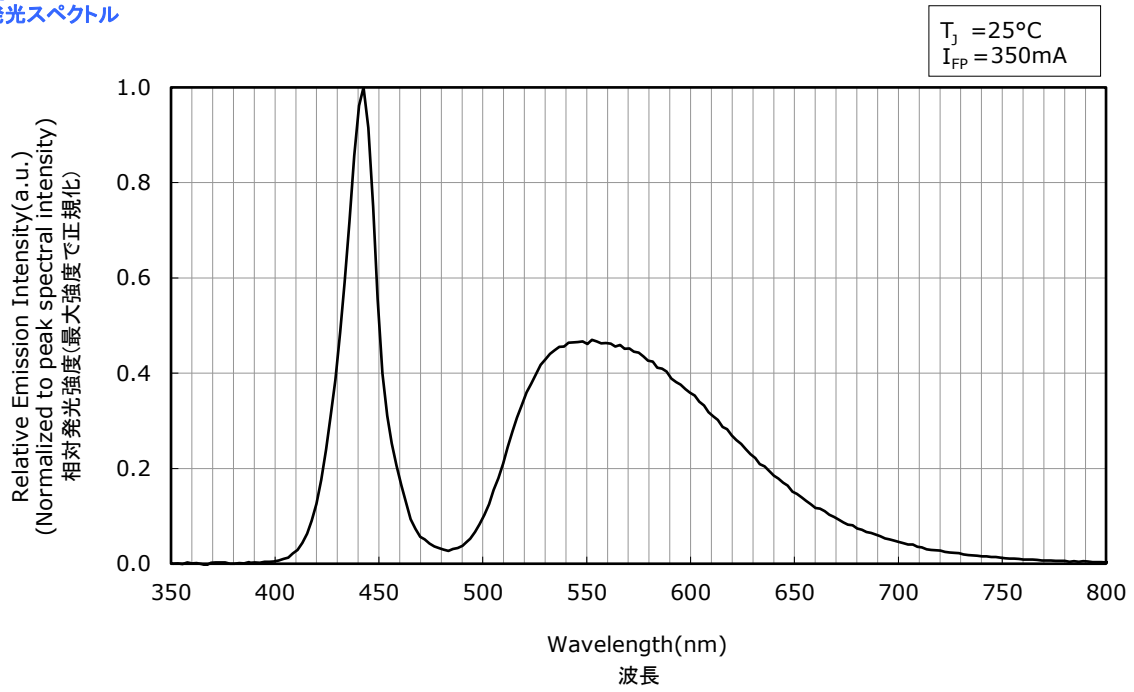

Directivity
指向特性

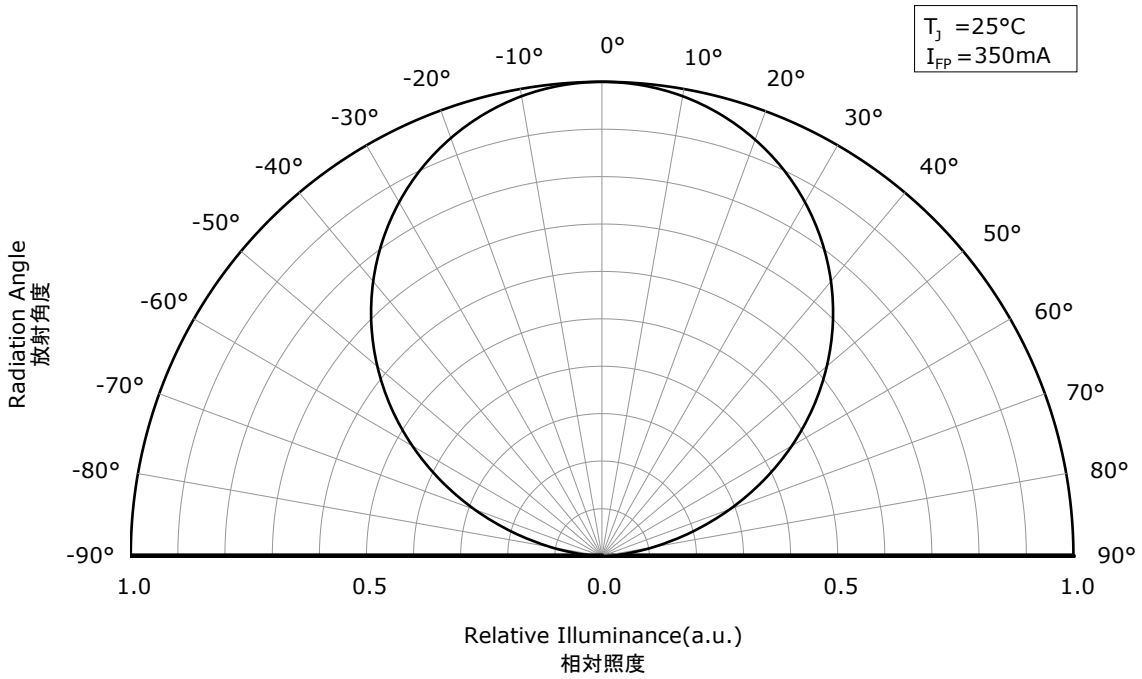

(2) Forward Current Characteristics / Temperature Characteristics

Part No. NJSW572B-Y6
No. STS-DA7-22661A

* All characteristics shown are for reference only and are not guaranteed.
本特性は参考です。
* Characteristics measured in a continuous square wave pulse mode with a pulse width of 0.05msec and a duty cycle of 1%.
パルス幅0.05msec、デューティー比1%の連続矩形波により測定しています。

Forward Voltage vs Forward Current
順電圧-順電流特性

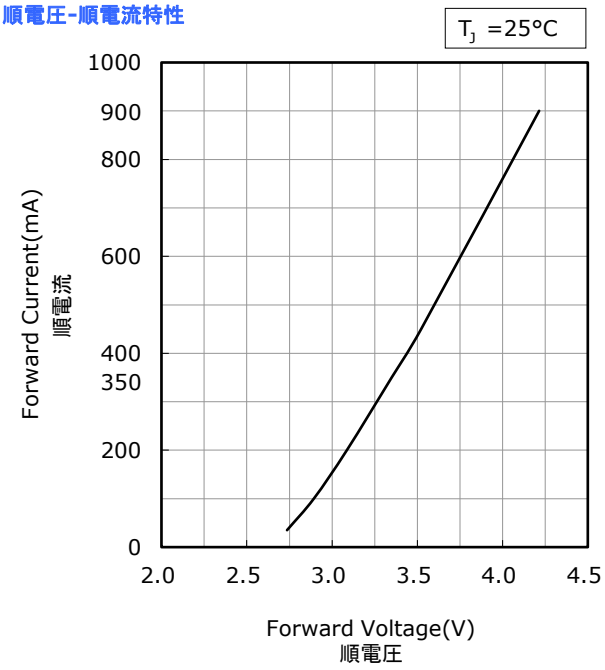

Junction Temperature vs Forward Voltage
ジャンクション温度-順電圧特性

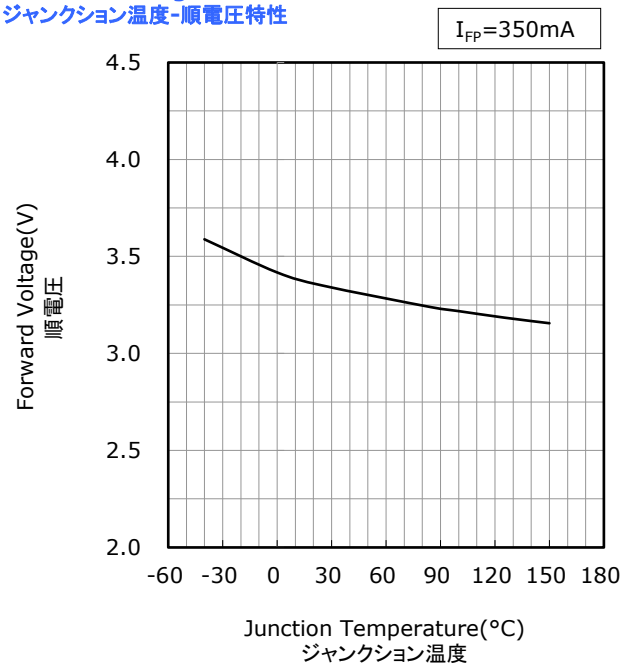

Forward Current vs Relative Luminous Flux
順電流-相対光束特性

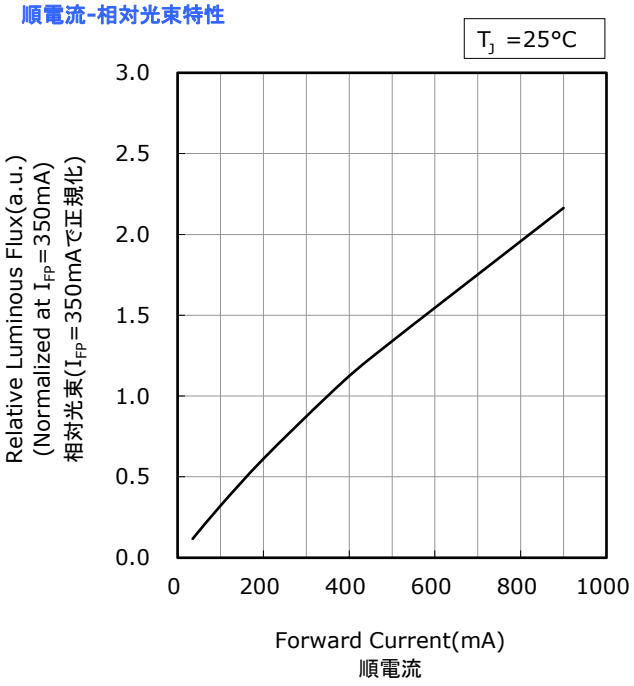

Junction Temperature vs Relative Luminous Flux
ジャンクション温度-相対光束特性

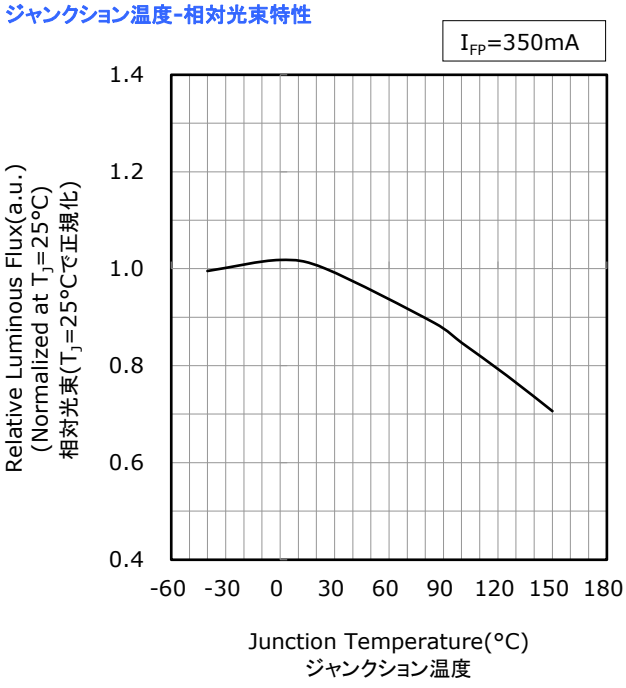

Part No. NJSW572B-Y6
No. STS-DA7-22662A

* All characteristics shown are for reference only and are not guaranteed.
本特性は参考です。
* Characteristics measured in a continuous square wave pulse mode with a pulse width of 0.05msec and a duty cycle of 1%.
パルス幅0.05msec、デューティー比1%の連続矩形波により測定しています。

Forward Current vs Chromaticity Coordinate
順電流-色度特性

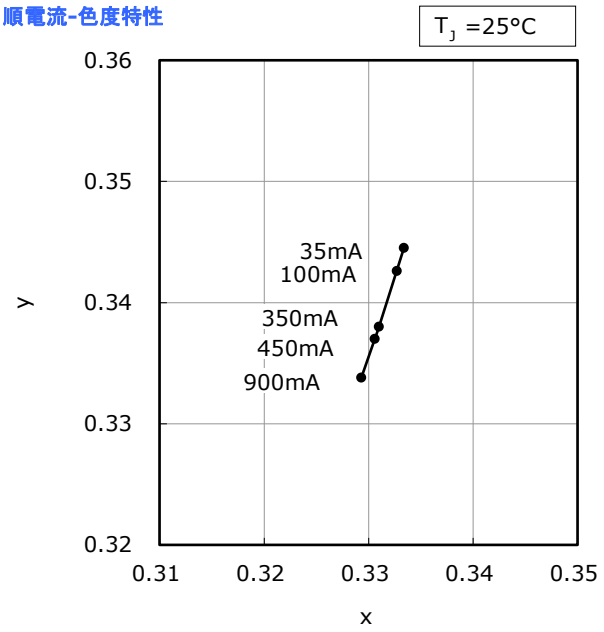

Junction Temperature vs Chromaticity Coordinate
ジャンクション温度-色度特性

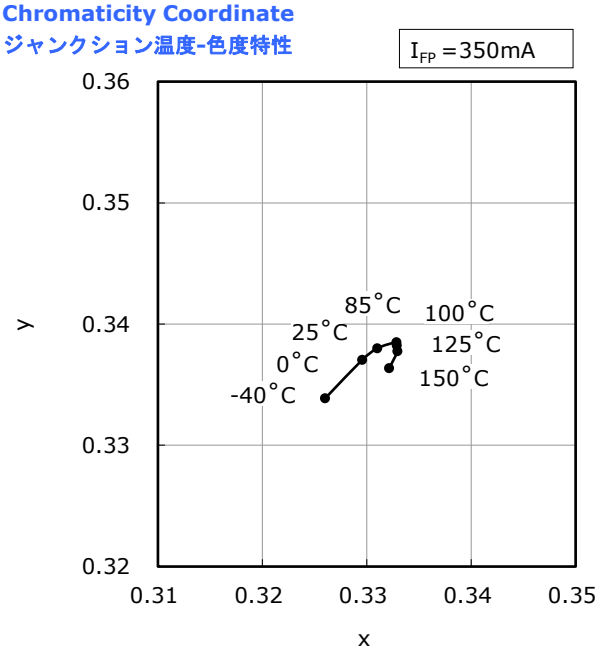

DERATING CHARACTERISTICS

Part No. NJSW572Bx
No. STS-DA7-16648B

Ambient Temperature vs Allowable Forward Current
周囲温度-許容順電流特性

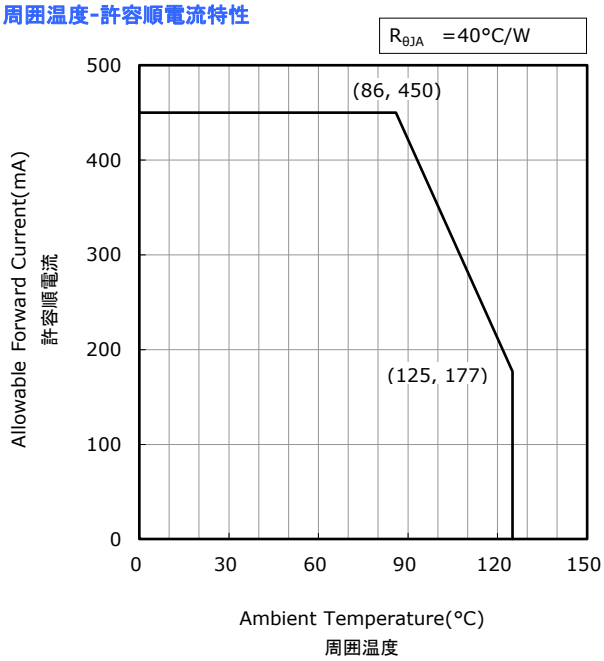

Solder Temperature(Cathode Side) vs Allowable Forward Current
はんだ接合部温度(カソード側)-許容順電流特性

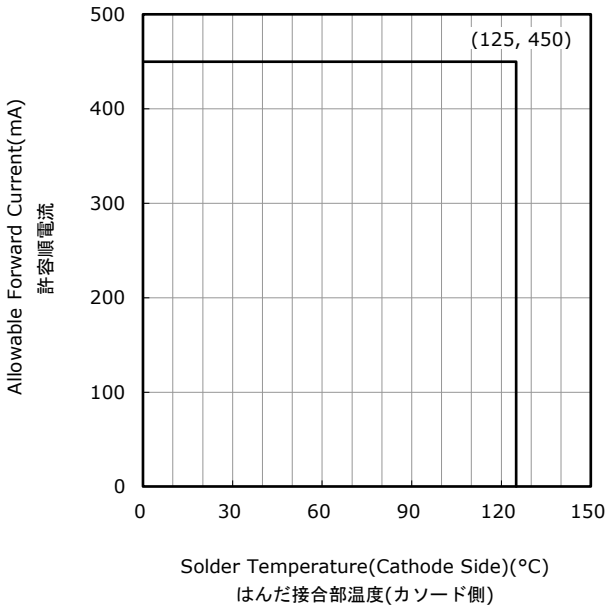

Pulse Width vs Allowable Forward Current
パルス幅-許容順電流特性

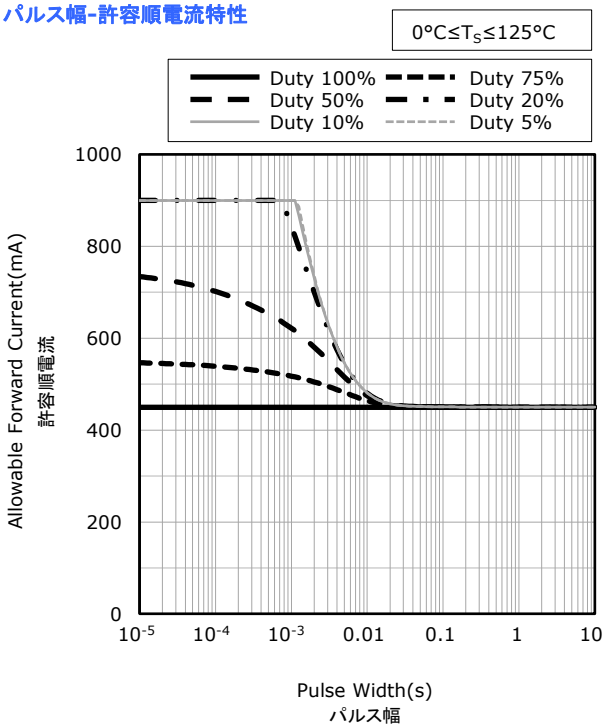

OUTLINE DIMENSIONS

＊ 本製品はRoHS指令に適合しております。
This product complies with RoHS Directive.
＊ 括弧で囲まれた寸法は参考値です。
The dimension(s) in parentheses are for reference purposes.

Part No. NJSx572x
No. STS-DA7-18587A

(単位 Unit: mm, 公差 Tolerance: ±0.2)

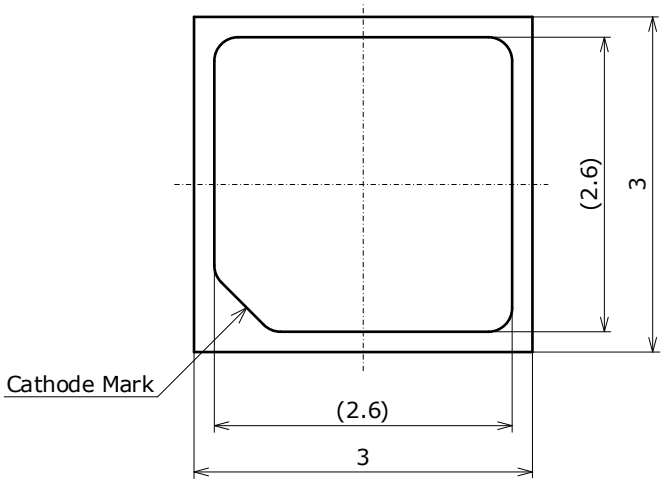

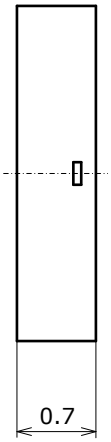

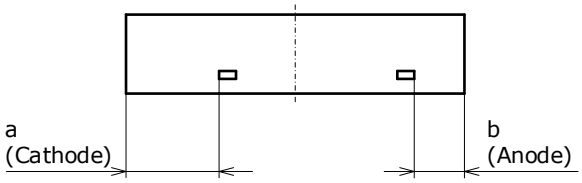

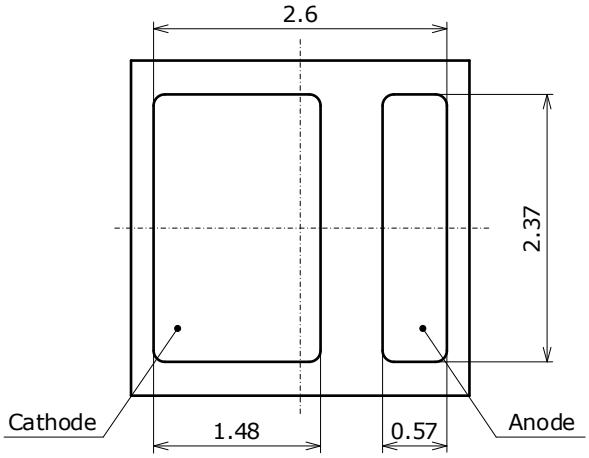

項目 Item	内容 Description
パッケージ材質 Package Materials	耐熱性ポリマー Heat-Resistant Polymer
封止樹脂材質 Encapsulating Resin Materials	シリコーン樹脂 （拡散剤+蛍光体入り） Silicone Resin (with diffuser and phosphor)
電極材質 Electrodes Materials	金メッキ Au-plated
質量 Weight	0.019g(TYP)

＊ バリは寸法に含まないものとします。
Dimensions do not include mold flash.
＊ a>bとなる場合、aがカソード側です。
The side with the larger distance is the cathode.
Example: a>b, then a is the side that has the cathode.

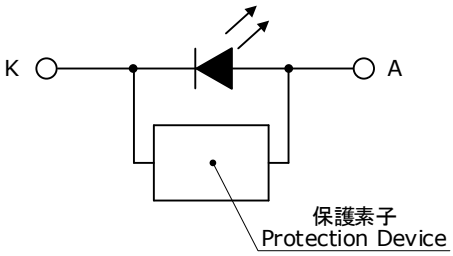

SOLDERING

- Recommended Reflow Soldering Condition(Lead-free Solder)

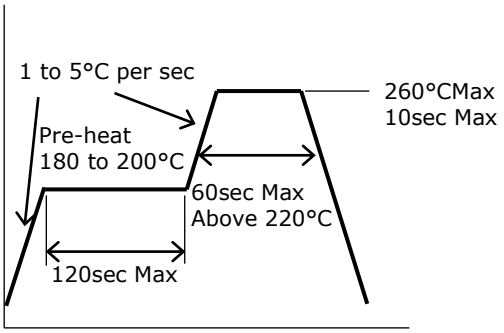

- Recommended Hand Soldering Condition

Temperature	350°C Max
Soldering Time	3sec Max

- Recommended Soldering Pad Pattern

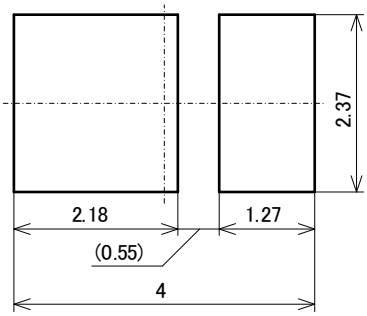

- Recommended Metal Solder Stencil Aperture

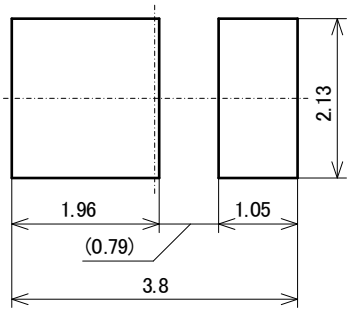

(単位 Unit: mm)

* This LED is designed to be reflow soldered to a PCB. If dip soldered, Nichia will not guarantee its reliability.
* Reflow soldering must not be performed more than twice. Hand soldering must not be performed more than once.
* When cooling the LEDs from the peak temperature a gradual cooling slope is recommended; do not cool the LEDs rapidly.
* During reflow soldering, the heat and atmosphere in the reflow oven may cause the optical characteristics to degrade. In particular, reflow soldering performed with an air atmosphere may have a greater negative effect on the optical characteristics than if a nitrogen atmosphere is used; Nichia recommends using a nitrogen reflow atmosphere.
* This LED uses a silicone resin for the encapsulating resin; the silicone resin is soft. If pressure is applied to the silicone resin, it may cause the resin to be damaged, chipped, delaminated and/or deformed. If the resin is damaged, chipped, delaminated and/or deformed, it may cause the wire to break causing a catastrophic failure (i.e. the LED not to illuminate) and/or reliability issues (e.g. the LED to corrode and/or to become dimmer, the color/directivity to change, etc.). Ensure that pressure is not applied to the encapsulating resin.
* Once the LEDs have been soldered to a PCB, it should not be repaired/reworked. If it must be done, using a double-head soldering iron is strongly recommended. Ensure that sufficient verification is performed prior to use to ensure that the repair/rework has not caused the LED characteristics to deteriorate.
* When soldering, do not apply stress to the LED while the LED is hot.
* When using an automatic pick-and-place machine, choose an appropriate nozzle for this LED. Using a pick-and-place nozzle with a smaller diameter than the size of the LED's emitting surface will cause damage to the emitting surface causing a catastrophic failure (i.e. the LED not to illuminate).

* If the top cover tape is removed right next to where the nozzle picks up the LEDs, regardless of whether the LEDs have been baked or not, it may cause the LED to be picked up incorrectly; it is recommended to remove the top cover tape further from where the nozzle picks up the LEDs. Ensure that there are no issues with the conditions when the nozzle picks up the LEDs.

• Recommended Tape Removal Position(Removing the cover tape further from the pick-and-place nozzle)

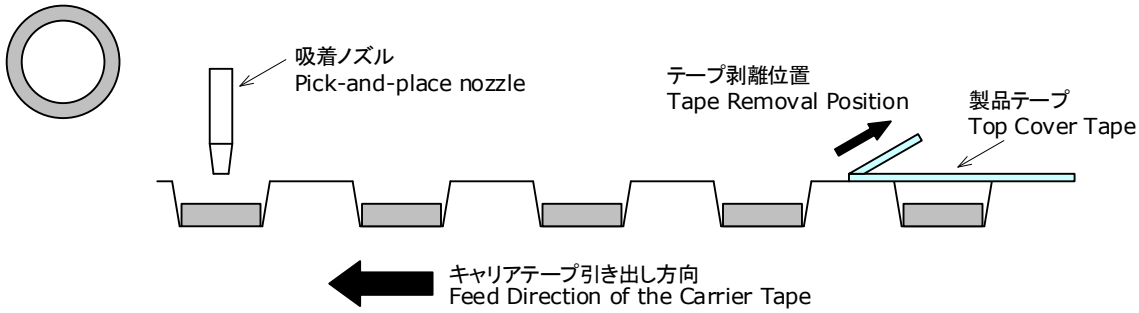

• Incorrect Tape Removal Position(Removing the cover tape right next to the pick-and-place nozzle)

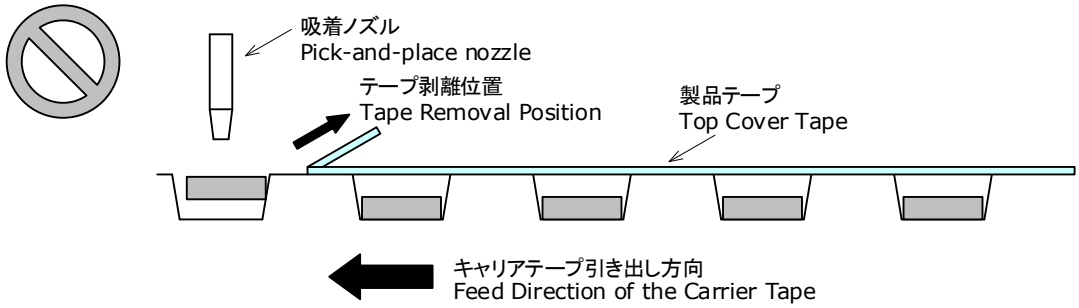

* Verify the setting conditions when the LEDs are mounted onto a PCB to ensure that the LEDs are mounted onto the PCB with the correct polarity. If the cathode mark is not able to be easily recognized with a visual inspection, check the back or side of the LED to determine the polarity.
* The soldering pad pattern above is a general recommendation for LEDs to be mounted without issues; if a high degree of precision is required for the chosen application (i.e. high-density mounting), ensure that the soldering pad pattern is optimized.
* Consider factors such as the reflow soldering temperature, hand soldering temperature, etc. when choosing the solder.
* When flux is used, it should be a halogen free flux. Ensure that the manufacturing process is not designed in a manner where the flux will come in contact with the LEDs.
* Ensure that there are no issues with the type and amount of solder that is being used.
* This LED has all the electrodes on the backside; solder connections will not be able to be seen nor confirmed by a normal visual inspection. Ensure that sufficient verification is performed on the soldering conditions prior to use to ensure that there are no issues.

TAPE AND REEL DIMENSIONS

Part No. Nxxx572x
No. STS-DA7-19362A

(単位 Unit: mm)

テーピング部 Tape

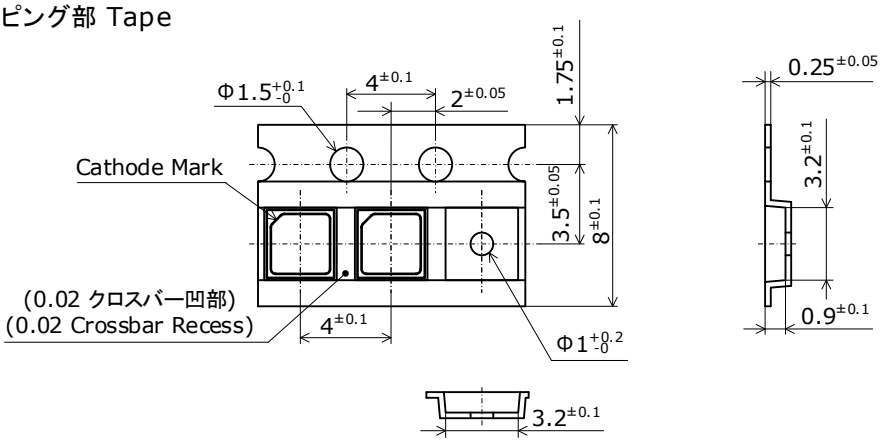

トレーラ部/リーダ部 Trailer and Leader

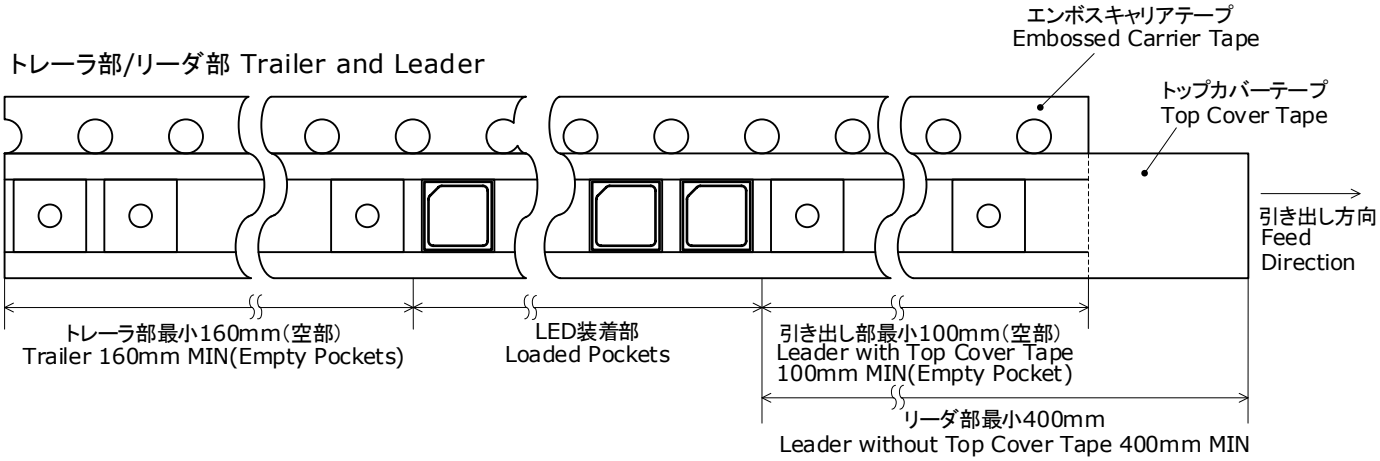

リール部 Reel

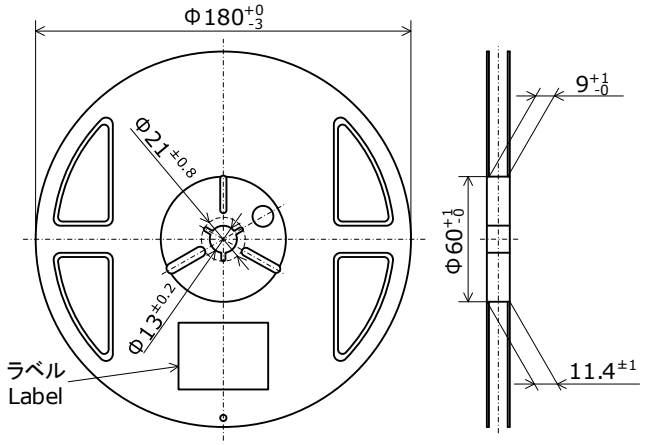

* 数量は1リールにつき 4000個入りです。
  Reel Size: 4000pcs
* 実装作業の中断などでエンボスキャリアテープをリールに巻き取る場合、
  エンボスキャリアテープを強く(10N以上)締めないで下さい。
  LEDがカバーテープに貼り付く可能性があります。
  When the tape is rewound due to work interruptions,
  no more than 10N should be applied to
  the embossed carrier tape.
  The LEDs may stick to the top cover tape.
* JIS C 0806電子部品テーピングに準拠しています。
  The tape packing method complies with JIS C 0806
  (Packaging of Electronic Components on Continuous Tapes).

PACKAGING - TAPE & REEL

Reels are shipped with desiccants in heat-sealed moisture-proof bags.
シリカゲルとともにリールをアルミ防湿袋に入れ、熱シールにより封をします。

Part No. Nxxxxxxx
No. STS-DA7-0006F

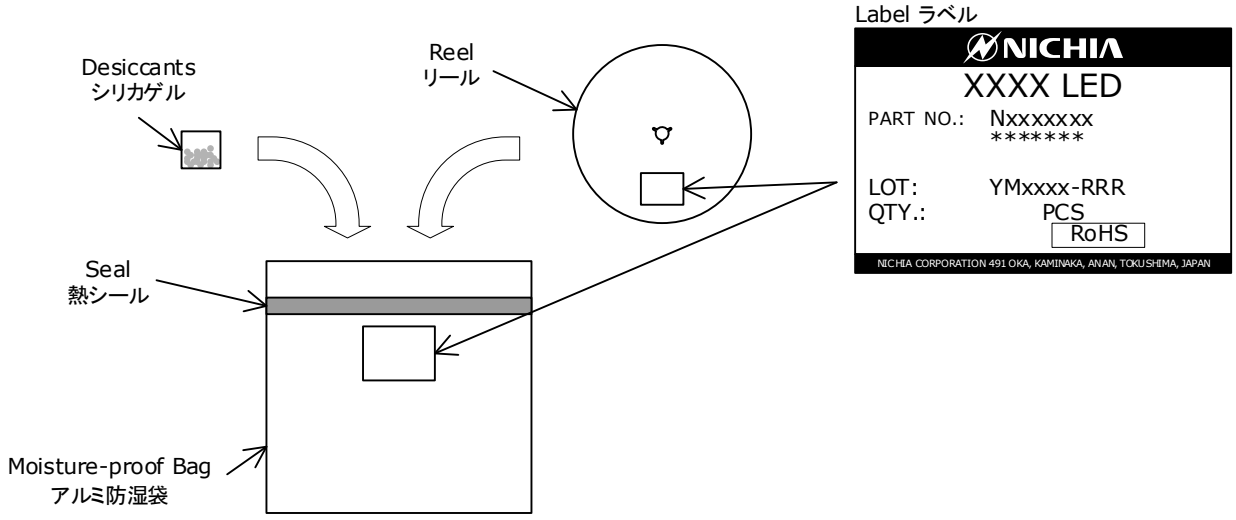

Moisture-proof bags are packed in cardboard boxes
with corrugated partitions.
アルミ防湿袋を並べて入れ、ダンボールで仕切ります。

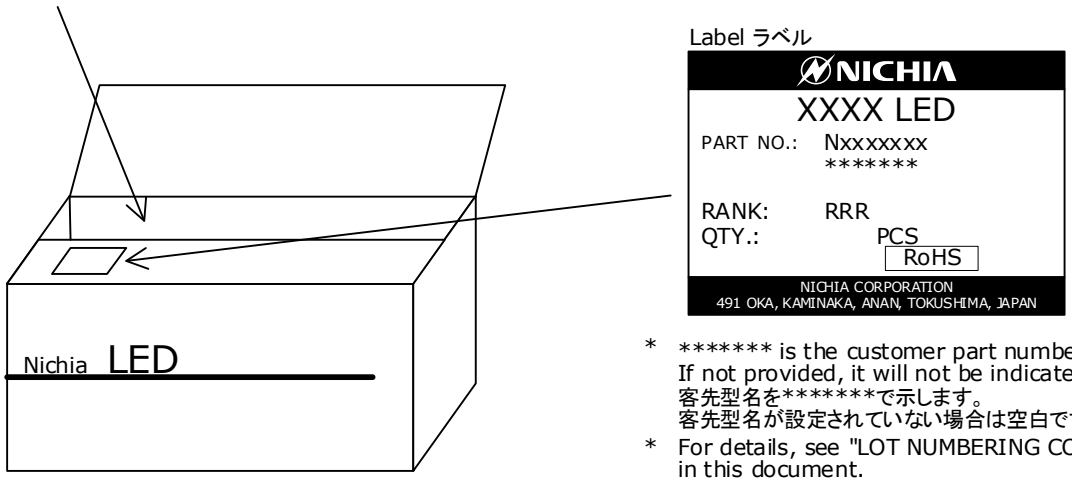

* ******* is the customer part number.
  If not provided, it will not be indicated on the label.
  客先型名を*******で示します。
  客先型名が設定されていない場合は空白です。
* For details, see "LOT NUMBERING CODE"
  in this document.
  ロット表記方法についてはロット番号の項を
  参照して下さい。
* The label does not have the RANK field for
  un-ranked products.
  ランク分けがない場合はランク表記はありません。

* Products shipped on tape and reel are packed in a moisture-proof bag.
  They are shipped in cardboard boxes to protect them from external forces during transportation.
  本製品はテーピングしたのち、輸送の衝撃から保護するためダンボールで梱包します。
* Do not drop or expose the box to external forces as it may damage the products.
  取り扱いに際して、落下させたり、強い衝撃を与えたりしますと、製品を損傷させる原因になりますので注意して下さい。
* Do not expose to water. The box is not water-resistant.
  ダンボールには防水加工がされておりませんので、梱包箱が水に濡れないよう注意して下さい。
* Using the original package material or equivalent in transit is recommended.
  輸送、運搬に際して弊社よりの梱包状態あるいは同等の梱包を行って下さい。

LOT NUMBERING CODE

Lot Number is presented by using the following alphanumeric code.

YMxxxx - RRR

Y - Year

Year	Y
2025	P
2026	Q
2027	R
2028	S
2029	T
2030	U

Thereafter, a letter of the alphabet is assigned to each year in alphabetical order.

M - Month

Month	M	Month	M
1	1	7	7
2	2	8	8
3	3	9	9
4	4	10	A
5	5	11	B
6	6	12	C

xxxx-Nichia's Product Number

RRR-Ranking by Color Coordinates, Ranking by Luminous Flux

CAUTIONS

(1) Storage

Conditions		Temperature	Humidity	Time
Storage	Before Opening Aluminum Bag	≤30°C	≤90%RH	Within 1 Year from Delivery Date
	After Opening Aluminum Bag	≤30°C	≤70%RH	≤168hours
Baking		65±5°C	-	≥24hours

- The storage/packaging requirements for this LED are comparable to JEDEC Moisture Sensitivity Level (MSL) 3 or equivalent. Nichia used IPC/JEDEC STD-020 as a reference to rate the MSL of this LED.
- This LED uses a package that could absorb moisture; if the package absorbs moisture and is exposed to heat during soldering, it may cause the moisture to vaporize and the package to expand and the resulting pressure may cause internal delamination. This may cause the optical characteristics to degrade. To minimize moisture absorption in storage/transit, moisture-proof aluminum bags are used for the LEDs with a silica gel packet to absorb any air moisture in the bag. The silica gel beads turn blue to red as they absorb moisture.
- Once the moisture-proof aluminum bag is open, ensure that the LED is soldered to a PCB within the range of the conditions above. To store any remaining unused LEDs, use a hermetically sealed container with silica gel desiccants. Nichia recommends placing them back to the original moisture-proof bag and reseal it.
- If the "After Opening" storage time has been exceeded or any pink silica gel beads are found, ensure that the LED are baked before use. Baking should only be done once.
- The parts/materials (e.g. housing, gasket/seal, secondary lens, lens cover, thermal grease, etc.) used with the LED in the same assembly/system may release corrosive gases containing sulfur, halogens, etc. A light-up test, sufficient verifications, etc. must be performed at the finished product level (i.e. automotive headlamp, luminaire, etc.) prior to use taking into consideration the conditions/environments in which the finished product will actually be used to ensure that the expected performance for the finished product is maintained. See below for the detailed information.

  Issues that may be caused by corrosive gases containing sulfur, halogens, etc.:

  This LED has plated parts. If the LED is exposed to corrosive gases containing sulfur, halogens, etc., it may cause the plated surface to tarnish. If the gases penetrate the LED (e.g. emitting surface, package material, etc.), it may cause the surface of the plated parts inside the package to tarnish. In addition, it has been confirmed that if a silicone resin is used in the LED, the gases may accelerate degradation of the silicone resin. As a result, the optical characteristics may be adversely affected (i.e. significant reduction in the brightness, significant color shift, etc.); in the worst case, the circuit could become open causing a catastrophic failure (i.e. the LED not to illuminate). When determining the storage environment for the LED and/or selecting parts/materials that will be used with the LED in the finished product, it must be ensured prior to use that corrosive gases containing sulfur, halogens, etc. are not generated.
- To avoid condensation, the LEDs must not be stored in areas where temperature and humidity fluctuate greatly.
- Do not store the LEDs in a dusty environment.
- Do not expose the LEDs to direct sunlight and/or an environment over a long period of time where the temperature is higher than normal room temperature.

(2) Directions for Use

- The circuit must be designed to ensure that the Absolute Maximum Ratings are not exceeded for each LED. The LEDs should be operated at a constant current per LED. In the case of operating at a constant voltage, Circuit B is recommended. If Circuit A is used, it may cause the currents flowing through the LEDs to vary due to the variation in the forward voltage characteristics of the LEDs on the circuit.

(A)

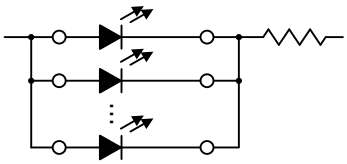

(B)

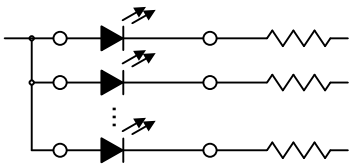

- This LED is designed to be operated at a forward current. Ensure that no voltage is applied to the LED in the forward/reverse direction while the LED is off. If the LEDs are used in an environment where reverse voltages are applied to the LED continuously, it may cause electrochemical migration to occur causing the LED to be damaged. When not in use for a long period of time, the system's power should be turned off to ensure that there are no issues/damage.
- To stabilize the LED characteristics while in use, Nichia recommends that the LEDs are operated at currents ≥ 10% of the sorting current.
- Ensure that transient excessive voltages (e.g. lightning surge) are not applied to the LEDs.
- If a secondary lens is used to collimate or diffuse the light, sufficient verification should be performed prior to use to ensure that there are no issues (e.g. color variation).
- If the LEDs are used for outdoor applications, ensure that necessary measures are taken (e.g. protecting the LEDs from water/salt damage and high humidity).

(3) Handling Precautions

- Do not handle the LEDs with bare hands:
  - this may contaminate the LED surface and have an effect on the optical characteristics,
  - this may cause the LED to deform and/or the wire to break causing a catastrophic failure (i.e. the LED not to illuminate).
- Ensure that when handling the LEDs with tweezers, excessive force is not applied to the LED. Otherwise, it may cause damage to the resin (e.g. cut, scratch, chip, crack, delamination and deformation) and the wire to break causing a catastrophic failure (i.e. the LED not to illuminate).
- Dropping may cause damage to the LED (e.g. deformation).
- Do not stack assembled PCBs together. Otherwise, it may cause damage to the resin (e.g. cut, scratch, chip, crack, delamination and deformation) and the wire to break causing a catastrophic failure (i.e. the LED not to illuminate).
- Due to the variation in the amount of the reflective material (white resin) that is coating the protection device, the area around the protection device may appear to be a black spot; this will not affect the characteristics of the LED. Do not use the location of the protection device to determine the polarity of the LED; use the cathode mark.

(4) Design Consideration

- If the LEDs are soldered to a PCB and the PCB assembly is bent (e.g. PCB depaneling process), it may cause the LED package to break. The PCB layout should be designed to minimize the mechanical stress on the LEDs when the PCB assembly is bent/warped.
- The amount of mechanical stress exerted on the LED from depaneling may vary depending on the LED position/orientation on the PCB assembly (e.g. especially in areas near V-groove scores). The PCB layout should be designed to minimize the mechanical stress on the LEDs when the PCB is separated into individual PCB assemblies.
- To separate a PCB populated with the LEDs, use a specially designed tool. Do not break the PCB by hand.
- The parts/materials (e.g. housing, gasket/seal, secondary lens, lens cover, thermal grease, etc.) used with the LED in the same assembly/system may release corrosive gases containing sulfur, halogens, etc., and/or volatile organic compounds (VOCs). A light-up test, sufficient verifications, etc. must be performed at the finished product level (i.e. automotive headlamp, luminaire, etc.) prior to use taking into consideration the conditions/environments in which the finished product will actually be used to ensure that the expected performance for the finished product is maintained. See below for the detailed information.

  Issues that may be caused by corrosive gases containing sulfur, halogens, etc.:

  This LED has plated parts. If the LED is exposed to corrosive gases containing sulfur, halogens, etc., it may cause the plated surface to tarnish. If the gases penetrate the LED (e.g. emitting surface, package material, etc.), it may cause the surface of the plated parts inside the package to tarnish. In addition, it has been confirmed that if a silicone resin is used in the LED, the gases may accelerate degradation of the silicone resin. As a result, the optical characteristics may be adversely affected (i.e. significant reduction in the brightness, significant color shift, etc.); in the worst case, the circuit could become open causing a catastrophic failure (i.e. the LED not to illuminate). When determining the storage environment for the LED and/or selecting parts/materials that will be used with the LED in the finished product, it must be ensured prior to use that corrosive gases containing sulfur, halogens, etc. are not generated.

  Issues that may be caused by VOCs:

  If VOCs that have been released from the parts/materials and/or organic additives used with the LED in the finished product penetrate into the LED and remain inside the LED, the VOCs can discolor after being exposed to heat and/or photon energy. This may cause the optical characteristics to be adversely affected (i.e. significant reduction in the brightness, significant color shift, etc.). This adverse effect may be improved by ventilating the environment (i.e. the LED is not used in a hermetically sealed environment) to prevent the VOCs from remaining inside the LED. When selecting parts/materials that will be used with the LED in the finished product, it must be ensured prior to use that there are no issues with the substances found in those parts/materials and/or that the expected performance for the finished product is maintained by performing a light-up test, sufficient verifications etc. taking into consideration the conditions/environments in which the finished product will actually be used.
- The characteristics of the LEDs (e.g. chromaticity, etc.) will vary depending on how the LEDs are designed into the application (e.g. secondary lens, luminaire cover/housing, etc. for ease of dissipation), how they were assembled, under what conditions/environments they are used (e.g. operating current/temperature, etc.), and how long they have been used (e.g. storage/operating hours, etc.). To ensure that there are no issues (e.g. deviations/changes in the characteristics, etc.) with the chosen application, perform a sufficient verification prior to use.

(5) Electrostatic Discharge (ESD)

- This LED is sensitive to transient excessive voltages (e.g. ESD, lightning surge). If this excessive voltage occurs in the circuit, it may cause the LED to be damaged causing issues (e.g. the LED to become dimmer or not to illuminate [i.e. catastrophic failure]). Ensure that when handling the LEDs, necessary measures are taken to protect them from an ESD discharge. The following examples are recommended measures to eliminate the charge:
  - Grounded wrist strap, ESD footwear, clothes, and floors
  - Grounded workstation equipment and tools
  - ESD table/shelf mat made of conductive materials
- Ensure that all necessary measures are taken to prevent the LEDs from being exposed to transient excessive voltages (e.g. ESD, lightning surge):
  - tools (e.g. soldering irons), jigs, and machines that are used are properly grounded
  - appropriate ESD materials/equipment are used in the work area
  - the system/assembly is designed to provide ESD protection for the LEDs.
- If the tool/equipment used is an insulator (e.g. glass cover, plastic, etc.), ensure that necessary measures have been taken to protect the LED from transient excessive voltages (e.g. ESD). The following examples are recommended measures to eliminate the charge:
  - Dissipating static charge with conductive materials
  - Preventing charge generation with moisture
  - Neutralizing the charge with ionizers
- To detect if an LED was damaged by transient excess voltages (i.e. an ESD event during the system's assembly process), perform a characteristics inspection (e.g. forward voltage measurement, light-up test) at low current (≤1mA).
- Failure Criteria: V_F<2.0V at I_F=0.5mA
  If the LED is damaged by transient excess voltages (e.g. ESD), it will cause:
  - the Forward Voltage (V_F) to decrease
  - the LED not to illuminate at a low current

(6) Thermal Management

- The Absolute Maximum Junction Temperature (T_J) must not be exceeded under any circumstances. The increase in the temperature of an LED while in operation may vary depending on the PCB thermal resistance and the density of LEDs on the PCB assembly. Ensure that when using the LEDs for the chosen application, heat is not concentrated in an area and properly managed in the system/assembly.
- The operating current should be determined by considering the temperature conditions surrounding the LED (i.e. T_A). Ensure that when operating the LED, proper measures are taken to dissipate the heat.
- The chosen thermal design must ensure that the Absolute Maximum Junction Temperature (T_J) will not be exceeded. Nichia recommends that the maximum values for the thermal resistances provided in the SPECIFICATIONS section under "Thermal Resistance" and the highest input power being used under the chosen conditions are taken into consideration for the thermal design. If they are not taken into consideration, perform sufficient verification prior to use under the actual operating conditions/environments where the LEDs will be used to ensure that there will be no issues with the chosen thermal design.

(7) Cleaning

- Do not wipe/clean the LEDs with a damp cloth soaked in water or solvents (e.g. benzine, thinner, etc.).
- If required, use isopropyl alcohol (IPA). If water or other solvent is used, it may cause issues. Before using the solvent, ensure that sufficient verification is performed to ensure that the solvent does not adversely affect the LEDs. In addition, the use of CFCs such as Freon is heavily regulated.
- When a foreign substance (e.g. dust, debris, loose materials, etc.) adheres to the LEDs, wipe it off with a damp well-squeezed cloth that was soaked only in isopropyl alcohol (IPA).
- Do not wipe the emitting surface. Otherwise, it may result in excessive pressure to the emitting surface causing issues (e.g. wire to deform, the encapsulating resin to become damaged, the color to change, etc.). If wiping the emitting surface is necessary, ensure that sufficient preliminary verification is performed to ensure that there are no issues; wipe the emitting surface at the customer's risk.
- Do not clean the LEDs with an ultrasonic cleaner. If cleaning must be done, ensure that sufficient verification is performed by using a finished assembly with LEDs to determine cleaning conditions (e.g. ultrasonic power, LED position on the PCB assembly) that do not cause an issue.

(8) Eye Safety

- There may be two important international specifications that should be noted for safe use of the LEDs: IEC 62471:2006 Photobiological safety of lamps and lamp systems and IEC 60825-1:2001 (i.e. Edition 1.2) Safety of Laser Products - Part 1: Equipment Classification and Requirements. Ensure that when using the LEDs, there are no issues with the following points:
  - LEDs have been removed from the scope of IEC 60825-1 since IEC 60825-1:2007 (i.e. Edition 2.0) was published. However, depending on the country/region, there are cases where the requirements of the IEC 60825-1:2001 specifications or equivalent must be adhered to.
  - LEDs have been included in the scope of IEC 62471:2006 since the release of the specification in 2006.
  - Most Nichia LEDs will be classified as the Exempt Group or Risk Group 1 according to IEC 62471:2006. However, in the case of high-power LEDs containing blue wavelengths in the emission spectrum, there are LEDs that will be classified as Risk Group 2 depending on the characteristics (e.g. radiation flux, emission spectrum, directivity, etc.)
  - If the LED is used in a manner that produces an increased output or with an optic to collimate the light from the LED, it may cause damage to the human eye.
- If an LED is operated in a manner that emits a flashing light, it may cause health issues (e.g. visual stimuli causing eye discomfort). The system should be designed to ensure that there are no harmful effects on the human body.

(9) Miscellaneous

- If the LEDs are used under conditions/environments deviating from or inconsistent with those described in this specification, the resulting damage and/or injuries will not be covered.
- It is the customer's responsibility to perform sufficient verification prior to use to ensure that the lifetime and other quality characteristics required for the intended use are met.
- The applicable warranty period is one year from the date that the LED is delivered. In the case of any incident that appears to be in breach of this warranty, the local Nichia sales representative should be notified to discuss instructions on how to proceed while ensuring that the LED in question is not disassembled or removed from the PCB if it has been attached to the PCB. If a breach of this warranty is proved, Nichia will provide the replacement for the non-conforming LED or an equivalent item at Nichia's discretion. FOREGOING ARE THE EXCLUSIVE REMEDIES AVAILABLE TO THE CUSTOMER IN RESPECT OF THE BREACH OF THE WARRANTY CONTAINED HEREIN, AND IN NO EVENT SHALL NICHIA BE RESPONSIBLE FOR ANY INDRECT, INCIDENTAL OR CONSEQUENTIAL LOSSES AND/OR EXPENSES (INCLUDING LOSS OF PROFIT) THAT MAY BE SUFFERED BY THE CUSTOMER ARISING OUT OF A BREACH OF THE WARRANTY.
- NICHIA DISCLAIMS ALL OTHER WARRANTIES, EXPRESS OR IMPLIED, INCLUDING THE IMPLIED WARRANTIES OF MERCHANTABILITY AND FITNESS FOR A PARTICULAR PURPOSE.
- This LED is intended to be used for general lighting, household appliances, electronic devices (e.g. mobile communication devices) and automobiles; it is not designed or manufactured for use in applications that require safety critical functions (e.g. aircraft, combustion equipment, life support systems, nuclear reactor control system, safety devices, spacecraft, submarine repeaters, traffic control equipment, trains, vessels, etc.). If the LEDs are planned to be used for these applications, unless otherwise detailed in the specification, Nichia will neither guarantee that the LED is fit for that purpose nor be responsible for any resulting property damage, injuries and/or loss of life/health.
- The customer will not reverse engineer, disassemble or otherwise attempt to extract knowledge/design information from the LED.
- All copyrights and other intellectual property rights in this specification in any form are reserved by Nichia or the right holders who have granted Nichia permission to use the content. Without prior written permission from Nichia, no part of this specification may be reproduced in any form or by any means.
- Both the customer and Nichia will agree on the official specifications for the supplied LEDs before any programs are officially launched. Without this agreement in writing (i.e. Customer Specific Specification), changes to the content of this specification may occur without notice (e.g. changes to the foregoing specifications and appearance, discontinuation of the LEDs, etc.).